Hop-Up Your T-Rex 700E With KDE Direct

While I consider myself a function over form person, I can't resist adding 'bling' to my helicopter. To the avid enthusiast, it's the same as jewelry to the ladies. KDE Direct is a leading manufacturer of high quality upgrade parts for various sizes and models of RC helicopters. In this article, I am illustrating how I upgraded my T-Rex 700E with the following KDE Direct components:

- Thrusted main bearing block and elevator lever, PN AT700E-MBB-V2, $72.95
- Triple mainshaft bearing block upgrade, AT700-TBB, $34.95
- Performance tail control upgrade, AT700-PTC-V2, $57.95

Each of the upgrade kits arrived in its own plastic bag and Installation Instructions can be downloaded from the KDE Direct website at: http://www.kdedirect.com/Installation Diagrams.html. I found the instructions to be excellent, showing exploded views of all the components and a list of all the parts included in the kit. Also on the instructions are important setup notes that should be followed for best performance. But enough about the instructions, let's talk about the bling!

The first upgrade I installed was the thrusted mainshaft bearing blocks and elevator lever kit. The stock T-Rex 700E kit utilizes radial bearings only for the mainshaft support. The KDE Direct design has special bearing blocks that are able to house both a radial and a thrust bearing. With this design, the radial bearing only has to handle the side-to-side loads, while the thrust bearings are allowed to handle only loads parallel to the mainshaft. By eliminating the thrust loads on the radial bearings, the radial bearings will last much longer while having less overall friction. This also results in slightly more power to the rotor head, and better hang-time during autorotations.

Installation was relatively straightforward. I removed the mainshaft from the helicopter and unbolted the stock main bearing blocks. The KDE Direct bearing blocks have the exact same mounting features as the stock blocks so they simply drop into the side frames. Also included with the thrusted bearing block upgrade is a new elevator lever. The new elevator lever provides clearance around the central hub portion of the bearing blocks.

One thing I did have to modify was the stock plastic elevator servo support. The new bearing blocks have extra material to house the thrust bearing which was hitting the sides of the elevator servo support. After a few seconds with a Dremel tool to create some notches in the plastic, the problem was solved. For those who wish to forgo this modification, KDE Direct does make a polished machined aluminum servo support (part number: AT700-ESM-V2) that has the necessary clearance already designed in.

The next upgrade I installed was the triple bearing block. This upgrade consists of a third bearing block and a mainshaft extension. By adding a third bearing block underneath the main gear of the helicopter, additional support is added to the mainshaft, keeping the gear mesh more consistent. This will increase gear life and prevent gear stripping when using extremely high-powered setups.

The stock T-Rex 700E frames do not have holes where the new bearing block has to mount so new holes need to be drilled. *Editor's note: the new "V2" kits from Align now include the holes in the frames as standard, so if you have a newer kit you will not need to drill these holes.* A set of left and right semi-transparent templates are included with the kit. They indicate where to drill the new holes in the side frames. This is easily done with a 3.5mm or 9/64" drill bit. Once the holes are drilled, the new bearing block can be loosely installed.

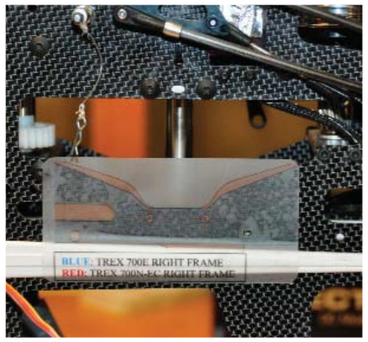

This is the drill template for locating the holes for the third bearing block.

The next step is to install the mainshaft extension into the mainshaft. The stock

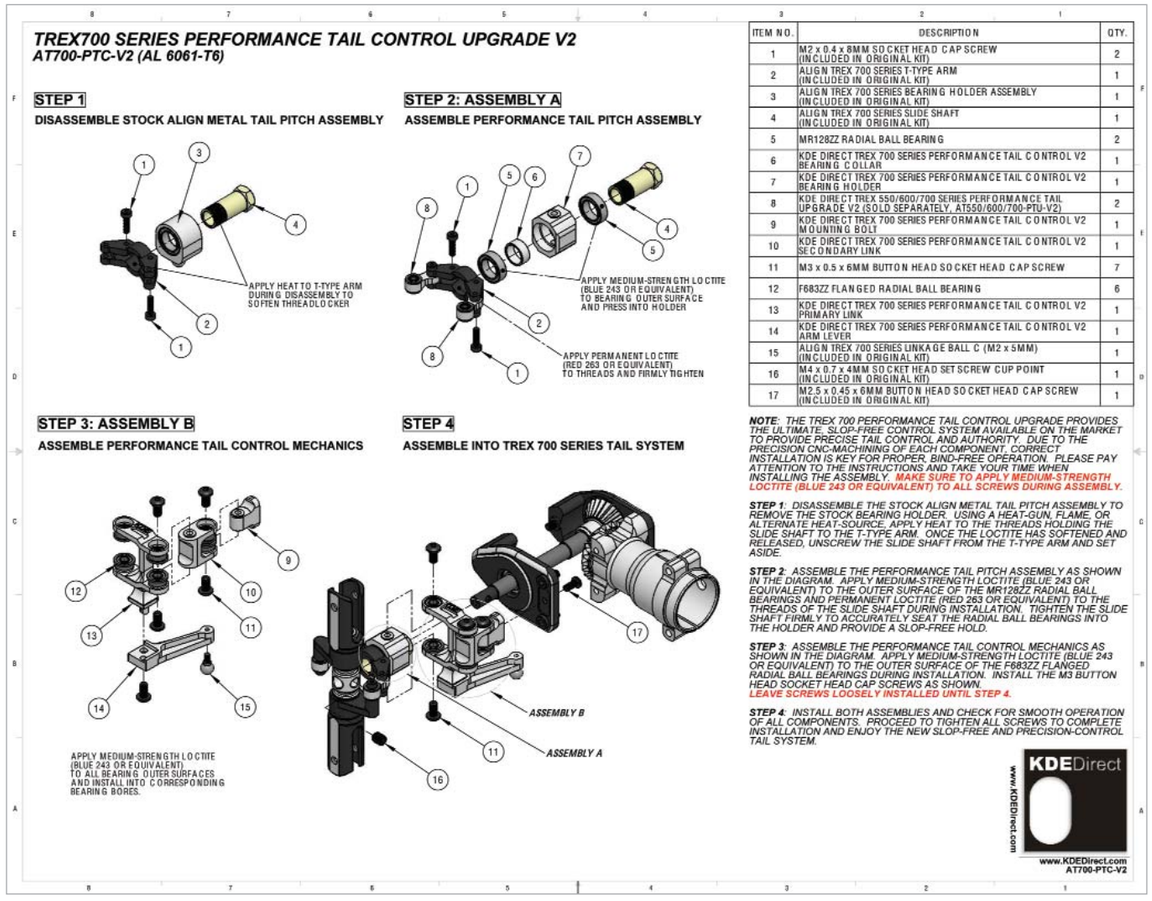

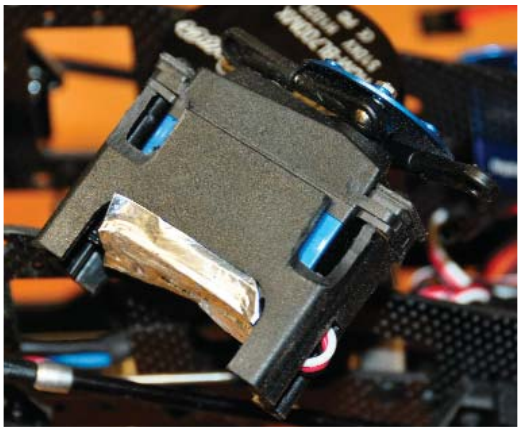

Clockwise from above: KDE Performance tail control upgrade (AT700-PTC-V2). KDE triple bearing block and elevator lever (AT700E-MBB and AT700-TBB). Material had to be removed from stock elevator servo support. KDE thrusted bearing block on top vs. stock block on the bottom.

mainshaft is hollow and the extension piece simply inserts into the bottom end of the mainshaft. It is secured with bearing retaining compound and the screw that normally holds on the main gear.

Once the mainshaft is reinstalled onto the helicopter and both the mainshaft and mainshaft extensions are through all three bearing blocks, the four screws that hold on the third bearing block can be fully tightened. It was initially left loose to allow the block to find its own center.

The final upgrade kit that I used was the performance tail control upgrade. It consists of an entirely new tail rotor pitch control lever. The stock lever for the T-Rex 700E is plastic, and moves the tail pitch slider only from the bottom which creates an offset load that can be susceptible to binding. In the KDE Direct design, the tail pitch slider is actuated from both the top and the bottom, creating an even load that is in-line with the tailshaft. The mod consists of six highly polished aluminum parts along with six flanged bearings. The entire kit simply bolts on requiring no additional holes or modifications. The completed unit gave me a more rigid and slop-free connection between the tail rotor servo and the tail blades themselves.

In addition to the upgrades that were described above, KDE Direct offers a number of other upgrades, both for the T-Rex 700E, as well as a multitude of other popular helicopters. Check out their website at www.kdedirect.com. Happy upgrading!!! ✪

Links

AlignRC, www.AlignRC.com.tw

HeliWholesaler, www.heliwholesaler.com, (877) 454-9757

KDE Direct, www.kdedirect.com, contact@kdedirect.com

For more information, please see our source guide on page 97.

Complete tail with the KDE Direct upgrades.

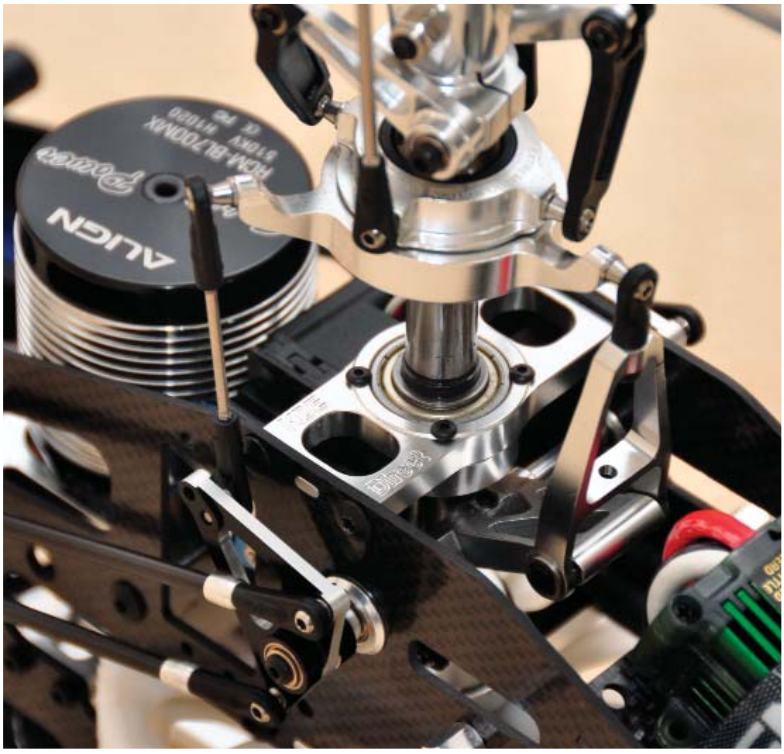

Completed with KDE bearing blocks and elevator support