SPEKTRUM/JR NECK STRAP BALANCER

Key Design Aspects

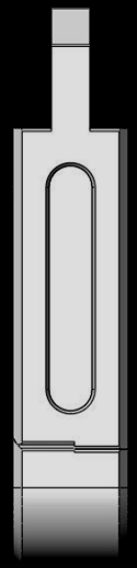

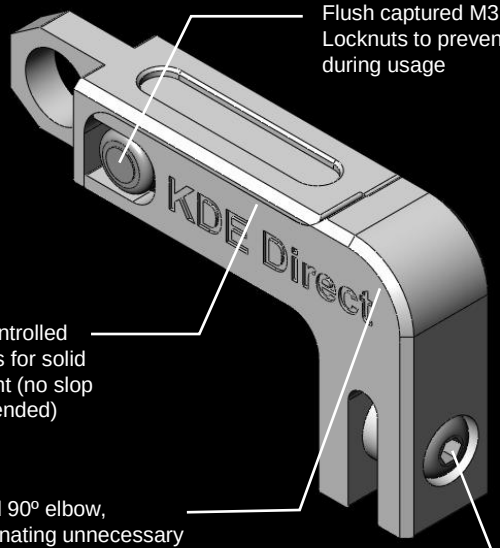

Flush captured M3 x 0.5 x 4mm Locknuts to prevent loosening during usage

Tightly controlled tolerances for solid adjustment (no slop when extended)

Solid 90º elbow, eliminating unnecessary adjustment features

Flush captured M3 x 0.5 x 10mm Button Head Socket Head Cap Screw (Stainless Steel)

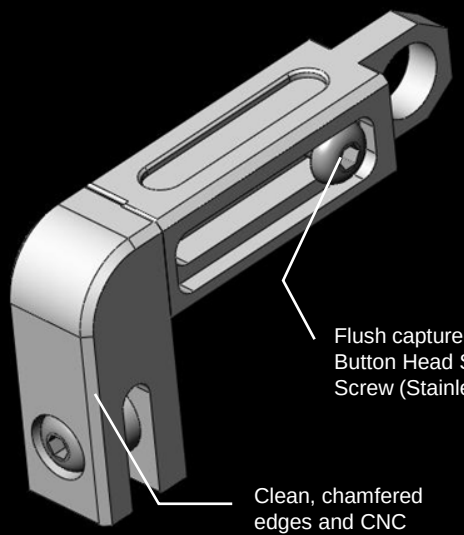

Flush captured M3 x 0.5 x 8mm Button Head Socket Head Cap Screw (Stainless Steel)

Clean, chamfered edges and CNC precision surfaces for aesthetic appeal and true quality finish